Experiment–1: A Look at Basic Circuit Theorems in Practice

Group no: - 14	Date of Experiment: - 28/07/2023
Roll no: - 22CS02002 20CS02012	Name: - Soham Chakraborty Kasthuri Hrushikesh

Part-1: Kirchoff's Voltage Law (KVL)

Aim of the Experiment: - Set up a circuit to verify Kirchoff's Voltage Law (KVL).

Equipments required: -

- Required resistor values– 1.8 kΩ (×3), 2.7 kΩ (×2), 4.7 kΩ (×1)
- Breadboard (×1)
- Variable DC power supply
- Digital Multimeter to measure Voltage/Resistance.
- Connecting wires

Circuit Diagram: -

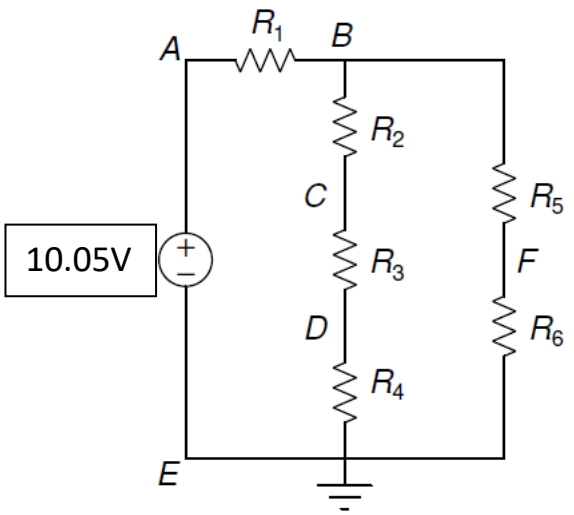

R1 = 4.5 kΩ

R2 = 1.77 kΩ

R3 = 1.77 kΩ

R4 = 1.75 kΩ

R5 = 2.46 kΩ

R6 = 2.50 kΩ

Observation Table: -

Voltage Quantities (V)	V_{AB}	V_{BC}	V_{CD}	V_{DE}	V_{EA}	V_{BF}	V_{FE}
	6.37	1.22	1.23	1.21	-10.05	1.84	1.81

Theoretically calculated values:-

V_{AB} = 6.38 V

V_{BC} = 1.22 V

V_{CD} = 1.22 V

V_{DE} = 1.22 V

V_{EA} = -10.05 V

V_{BF} = 1.83 V

V_{FE} = 1.83 V

Calculation: -

Using KVL in **Loop–1:** A → B → C → D → E → A

$$V_{AB} + V_{BC} + V_{CD} + V_{DE} + V_{EA} \text{ (in V)}$$

$$= 6.37 + 1.22 + 1.23 + 1.21 - 10.05$$

$$= -0.02 \approx 0$$

Using KVL in **Loop–2:** B → F → E → D → C → B

$$V_{BF} + V_{FE} + V_{ED} + V_{DC} + V_{CB} \text{ (in V)}$$

$$= 1.84 + 1.81 - 1.21 - 1.23 - 1.22$$

$$= -0.01 \approx 0$$

Using KVL in **Loop–3:** A → B → F → E → A

$$V_{AB} + V_{BF} + V_{FE} + V_{EA} \text{ (in V)}$$

$$= 6.37 + 1.84 + 1.81 - 10.05$$

$$= -0.03 \approx 0$$

Part-2: Kirchoff's Current Law (KCL)

Aim of the Experiment: - Set up a circuit to verify Kirchoff's Current Law (KCL).

Equipments required: -

- Required resistor values– 3.3 kΩ (×3), 1 kΩ (×2)
- Breadboard (×1)
- 12V fixed DC power supply and variable DC power supply
- Digital Multimeter to measure Voltage/Resistance.
- Connecting wires

Circuit Diagram: -

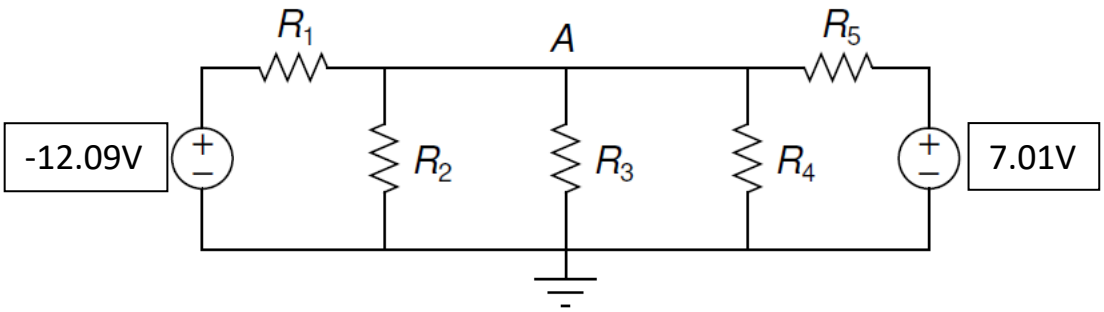

R_1 = 0.977 kΩ **R_2** = 3.27 kΩ **R_3** = 3.26 kΩ **R_4** = 3.24 kΩ **R_5** = 0.973 kΩ

Observation Table: -

Voltage Quantities (V)	V_{R1}	V_{R2}	V_{R3}	V_{R4}	V_{R5}
	-10.30	1.74	1.73	1.73	-8.77
Current (mA)	I_{R1} = -10.54	I_{R2} = 0.53	I_{R3} = 0.53	I_{R4} = 0.53	I_{R5} = 9.05

Theoretically calculated values:-

Let the Voltage at A be V and ground voltage 0.

Using KCL at point A:

$$\boxed{\frac{(V+12.09)}{0.977}+(V-0)\times\left(\frac{1}{3.27}+\frac{1}{3.26}+\frac{1}{3.24}\right)+\frac{(V-7.01)}{0.973}=0}$$

Thus, **V =** -1.74 **V**

V_{R1} = -12.09 – V = -10.35 V

V_{R2} = 0 – V = 1.74 V

V_{R3} = 0 – V = 1.74 V

V_{R4} = 0 – V = 1.74 V

V_{R5} = 7.01 – V = 8.75 V

$I_{R1} = \frac{VR1}{R1}$ = -10.59 mA

$I_{R2} = \frac{VR2}{R2}$ = 0.53 mA

$I_{R3} = \frac{VR3}{R3}$ = 0.53 mA

$I_{R4} = \frac{VR4}{R4}$ = 0.53 mA

$I_{R5} = \frac{VR5}{R5}$ = 8.99mA

Calculation: -

$I_{R1} = \frac{VR1}{R1}$ = -10.54 mA

$I_{R2} = \frac{VR2}{R2}$ = 0.53 mA

$I_{R3} = \frac{VR3}{R3}$ = 0.53 mA

$I_{R4} = \frac{VR4}{R4}$ = 0.53 mA

$I_{R5} = \frac{VR5}{R5}$ = 9.01 mA

Net current at node A:

$$I_{R1} + I_{R2} + I_{R3} + I_{R4} + I_{R5}$$

$$= -10.54 + 0.53 + 0.53 + 0.53 + 9.01$$

$$= 0.06 \approx 0$$

Part-3: Superposition Principle

Aim of the Experiment: - Set up a circuit to verify Superposition Theorem

Equipments required: -

- Required resistor values– 3.3 kΩ (×3), 1 kΩ (×2)
- Breadboard (×1)
- 12V fixed DC power supply and variable DC power supply
- Digital Multimeter to measure Voltage/Resistance.
- Connecting wires

Circuit Diagram: -

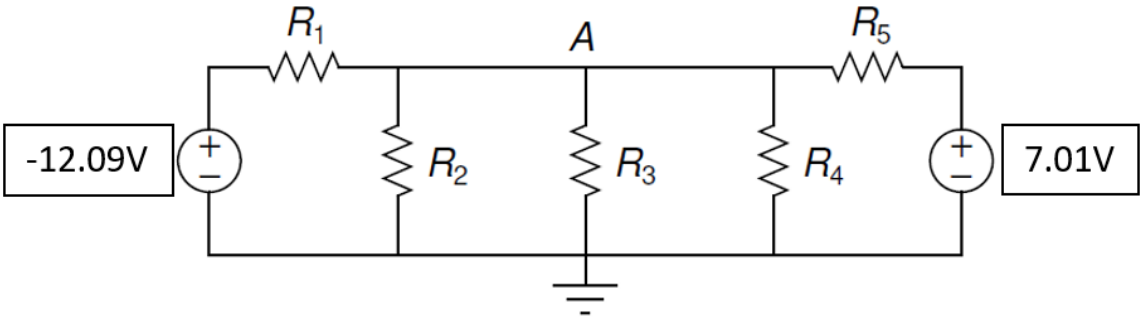

R_1 = 0.977 kΩ **R_2** = 3.27 kΩ **R_3** = 3.26 kΩ **R_4** = 3.24 kΩ **R_5** = 0.973 kΩ

Observation Table: -

Voltage Quantities (V)	**V_{R3}**	**V'_{R3}**	**V''_{R3}**
	1.71	-2.45	4.13
Current (mA)	**I_{R3}** = 0.52	**I'_{R3}** = -0.75	**I''_{R3}** = 1.27

Theoretically calculated values:-

Using Superposition Principle, After shorting the 12.09V DC source. We get,

$V'_{R3} = \frac{7.01}{Req1+R5} \times Req1$

$$\frac{1}{Req1} = \frac{1}{R1} + \frac{1}{R2} + \frac{1}{R3} + \frac{1}{R4}$$

R_{eq1}= 0.514 kΩ

V'_{R3} = 2.42 V

$I'_{R3} = \frac{V'R3}{R3}$ = -0.75mA

Shorting the 7.01V DC Source, we have-

$V''_{R3} = \frac{-12.09}{Req2+R1} \times Req2$

$$\frac{1}{Req2} = \frac{1}{R2} + \frac{1}{R3} + \frac{1}{R4} + \frac{1}{R5}$$

R_{eq2}= 0.513 kΩ

V'_{R3} = -4.17 V

$I'_{R3} = \frac{V''R3}{R3}$ = 1.28mA

Thus, Using superposition we have

$$\boxed{I_{R3} = I'_{R3} + I''_{R3}}$$

I_{R3}= 1.28 – 0.75 = 0.53 mA

Hence, the value of I_{R3} matches closely with the previously calculated value using KCL.

Calculation: -

$\mathbf{I_{R3}} = \frac{\mathbf{VR3}}{\boldsymbol{R3}} = 0.52$ mA

$\mathbf{I'_{R3}} = \frac{\boldsymbol{V'R3}}{\boldsymbol{R3}} = -0.75$ mA

$\mathbf{I''_{R3}} = \frac{\boldsymbol{V''R3}}{\boldsymbol{R3}} = 1.27$ mA

$I'_{R3} + I''_{R3} = 1.27 - 0.75 = 0.52 \approx I_{R3} = 0.52$ mA

Hence, the value of I_{R3} matches closely with the value of $I'_{R3} + I''_{R3}$.

Thus, Superposition Theorem is verified.

Part-4: Thevenin's Theorem

Aim of the Experiment: - Set up a circuit to verify Thevenin's Theorem

Equipments required: -

- Required resistor values– 4.7 kΩ (×2), 1 kΩ (×3)
- Breadboard (×1)
- 5V fixed DC power supply and variable DC power supply
- Digital Multimeter to measure Voltage/Resistance.
- Connecting wires

Circuit Diagram: -

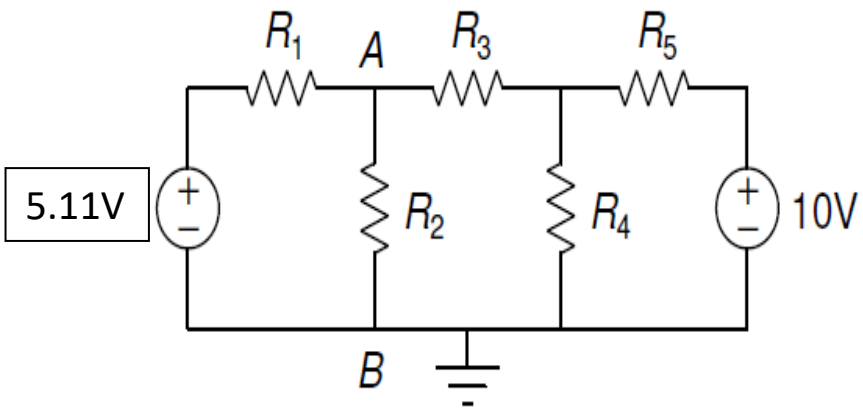

$\mathbf{R_1} = 0.98\ k\Omega$

$\mathbf{R_2} = 4.57\ k\Omega$

$\mathbf{R_3} = 0.983\ k\Omega$

$\mathbf{R_4} = 4.6\ k\Omega$

$\mathbf{R_5} = 0.98\ k\Omega$

Observations: -

$\mathbf{V}_{R2} = 5.41$ V

$\mathbf{V}_{AB} = V_{th} = 6.18$ V

$\mathbf{R}_{AB} = \mathbf{R}_{th} = 0.57\ k\Omega$

After connecting in Thevenin circuit

Resistance closest to $R_{th} = 0.981\ k\Omega$ $\mathbf{V}^1_{R2} = 5.18$ V

Theoretically calculated values:-

After removing R_2

Let the voltage at the node of intersection of R_3 , R_4 , R_5 be V and at ground be 0.

Then Using KCL similar to as in part 2.

We get,

$\mathbf{V}$ = 7.33 V

Then, voltage a A=5.11+ $\frac{(V - 5.11)}{R1+R3} \times R1$ = 6.22 V

Thevenin Voltage V_{th} across terminals A and B will be

$\mathbf{V}_{th}$= V_A-V_B = 6.22 V

After short-circuiting the voltage sources. Thevenin resistance R_{th} is calculated as follows:

$$\mathbf{R}_{th} = \frac{(\frac{R4\times R5}{(R4+R5)}+R3)\times R1}{R1+(\frac{R4\times R5}{(R4+R5)}+R3)}$$

$\mathbf{R}_{th}$ = 0.63 kΩ

Finally, current through R_2 is calculated using

$$\boxed{\mathbf{I}_{th}=\frac{Vth}{Rth+R2}}$$

$\mathbf{I}_{th}$ = 1.19 mA

$\mathbf{I_2 = I}_{th}$ = 1.19 mA

Calculation: -

$$\mathbf{I}^{ref}_{R2} = \frac{VR2}{R2} = 1.20 \text{ mA}$$

$$\mathbf{I}^{calc}_{R2} = \frac{VAB}{RAB+R2} = \frac{Vth}{Rth+R2} = 1.18 \text{ mA}$$

Thus, we see that that the calculated current using Thevenin's theorem is almost equal to the measured current through R_2. Also, this data is approximately equal to the theoretical Values of I_{th}. Hence, Thevenin's theorem is verified.

Conclusion: -

- In this experiment we have thus verified the Kirchoff's Voltage Law (KVL), Kirchoff's Current Law (KCL), Superposition Theorem and Thevenin's theorem.
- This experiment also helped getting a basic idea of how to use a breadboard and other breadboard connections.
- The theoretical values matched closely with that of the observed/calculated values. Slight differences were observed due to tolerances in the resistor and other minute errors.
- In the part 3,4 of experiment during short-circuiting the DC power supply, we have to remove the power supply and then replace it with a wire. Otherwise, short-circuiting the ends of power supply can cause serious damage to equipments.
- The variable factors affecting the readings, has very low amount of deviations which make the theoretical procedures dependable to an extent.

Discussion:-

- **How to use DMM (Digital Multimeter) optimally?**

  DMM stands for Digital Multimeter and is used to measure Resistance, AC and DC Voltage Difference, Current.

  For optimal usage of DMM to measure resistance, we hold one end of the resistance wire and the other end is touched with the other end of DMM without touching hands. Pressing the resistor with both hands to hold on to the multimeter causes our body resistance to also be in parallel to the resistor causing a difference in the value in the resistor. This shows an error in resistance value. Thus, we are only supposed to hold the resistor with one hand.

  For measuring voltage using DMM, both the DC and AC voltages can be measured using the DC mode but using AC mode to measure DC voltage can caue the device to break.

  Also, when measuring the values in DMM it is necessary to choose the proper units/scale in which the values are to be presented for maximum accuracy.

- **What are colour codes in resistors?**

  Resistors are usually very tiny, and it is challenging to print resistance values on them. So, colour bands are printed on them to represent the electrical resistance. These colour bands are known as resistor colour codes.

  The number of bands present in a resistor varies from three to six. The first two bands indicate the resistance value and the third band serves as a multiplier.

Colour	Digit	Multiplier	Tolerance
Black	0	1	
Brown	1	10	± 1%
Red	2	100	± 2%
Orange	3	1000	
Yellow	4	10,000	
Green	5	100,000	± 0.5%
Blue	6	1,00,000	± 0.25%
Violet	7	10,000,000	± 0.1%
Grey	8		± 0.05%
White	9		
Gold		0.1	± 5%
Silver		0.01	± 10%

- **Why are the errors caused in the theoretical and observed values?**

  Errors caused in this experiment are mainly due to 2 major factors, tolerance of resistors and deviation from rated values of equipment. The resistors have a tolerance value printed on them via the colour codes this contributes to the percentage errors in the resistance values. Higher tolerance, higher the error. In resistors, the resistance ca be mostly higher than the rating but the temperature of the circuit after supply starts balances by increasing conductivity.

Also, the marked values in equipments such as the 5V marked DC Power Supply was measured to be 5.11V. Thus the deviation of marked/rated values from observed values also has a significant part in the contribution of errors.

Also, certain other factors contribute minorly to the errors.